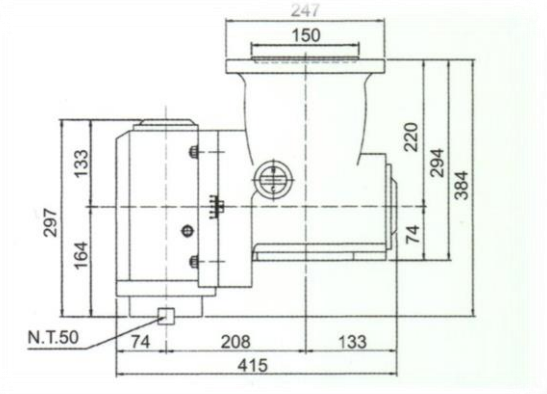

IK-U90

SPECIFICATION

MODEL	Unit	IK-U90
Universal Head		
Spindle Bore Diameter		NT50
Speed Ratio		1:1
Max Diameter of Cutter	mm	150
Max Speed	rpm	800/200
Place of Origin	Taiwan	
Weight (Approximate)	kg	118
Warranty	1 year (non artificial mistake)	

※**We reserve the right to modify the design and specifications without notice in advance.**